# 1/4 HEX Fimale Standoffs  Steel

| Thread(A) | Length (C) | D | E | B |
|---|---|---|---|---|
| 6-32 | 3/32 | TAPPED THROUGH | | 1/4" |
| 6-32 | 1/8 | TAPPED THROUGH | | 1/4" |
| 6-32 | 5/32 | TAPPED THROUGH | | 1/4" |
| 6-32 | 3/16 | TAPPED THROUGH | | 1/4" |
| 6-32 | 7/32 | TAPPED THROUGH | | 1/4" |
| 6-32 | 1/4 | TAPPED THROUGH | | 1/4" |
| 6-32 | 9/32 | TAPPED THROUGH | | 1/4" |
| 6-32 | 5/16 | TAPPED THROUGH | | 1/4" |
| 6-32 | 11/32 | TAPPED THROUGH | | 1/4" |
| 6-32 | 3/8 | TAPPED THROUGH | | 1/4" |
| 6-32 | 13/32 | TAPPED THROUGH | | 1/4" |
| 6-32 | 7/16 | TAPPED THROUGH | | 1/4" |
| 6-32 | 15/32 | TAPPED THROUGH | | 1/4" |
| 6-32 | 1/2 | TAPPED THROUGH | | 1/4" |
| 6-32 | 17/32 | TAPPED THROUGH | | 1/4" |
| 6-32 | 9/16 | TAPPED THROUGH | | 1/4" |
| 6-32 | 19/32 | TAPPED THROUGH | | 1/4" |
| 6-32 | 5/8 | TAPPED THROUGH | | 1/4" |
| 6-32 | 21/32 | TAPPED THROUGH | | 1/4" |
| 6-32 | 11/16 | TAPPED THROUGH | | 1/4" |
| 6-32 | 23/32 | TAPPED THROUGH | | 1/4" |
| 6-32 | 3/4 | TAPPED THROUGH | | 1/4" |
| 6-32 | 25/32 | TAPPED THROUGH | | 1/4" |
| 6-32 | 13/16 | TAPPED THROUGH | | 1/4" |
| 6-32 | 27/32 | TAPPED THROUGH | | 1/4" |
| 6-32 | 7/8 | TAPPED THROUGH | | 1/4" |
| 6-32 | 29/32 | TAPPED THROUGH | | 1/4" |
| 6-32 | 15/16 | TAPPED THROUGH | | 1/4" |
| 6-32 | 31/32 | TAPPED THROUGH | | 1/4" |
| 6-32 | 1" | TAPPED THROUGH | | 1/4" |
| 6-32 | 1-1/16 | 7/16 | 7/16 | 1/4" |
| 6-32 | 1-1/8 | 7/16 | 7/16 | 1/4" |
| 6-33 | 1-3/16 | 7/16 | 7/16 | 1/4" |

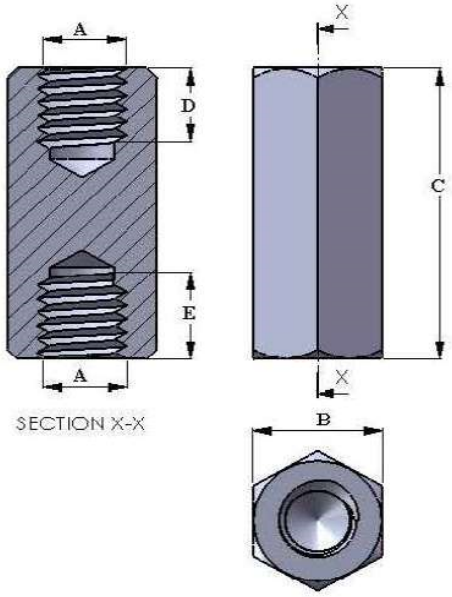


1. No burrs and sharp edges.
2. material:1215 Carbon steel.
3. Finish: Zinc 3. 8 μm min. with blue Chromate.
4. lateral and finish to comply with European Union Restriction of Hazardous Substances Directive 2011/65/EU(RoHS.