BU508AF

High voltage NPN power transistor for standard definition CRT display

Features

- State-of-the-art technology:
  - Diffused collector “Enhanced generation”
- Stable performances versus operating temperature variation
- Low base-drive requirement
- Tight h_{FE} range at operating collector current
- High ruggedness
- Fully insulated power package U.L. compliant

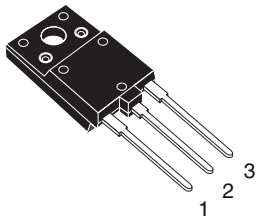

ISOWATT218FX

Applications

- Horizontal deflection output for CRT TV
- Switch mode power supplies for CRT TV

Description

The BU508AF is manufactured using diffused collector in planar technology adopting new and enhanced high voltage structure for updated performance to the horizontal deflection stage.

Figure 1. Internal schematic diagram

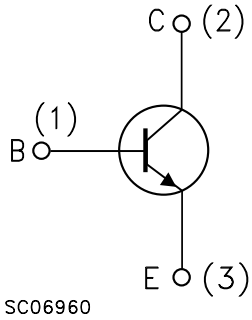

Table 1. Device summary

Order code	Marking	Package	Packaging
BU508AF	BU508AF	ISOWATT218FX	Tube

Content

1 Electrical ratings

Table 2. Absolute maximum rating

Symbol	Parameter	Value	Unit
V_{CES}	Collector-emitter voltage (V_{BE} = 0)	1500	V
V_{CEO}	Collector-emitter voltage (I_B = 0)	700	V
V_{EBO}	Collector-base voltage (I_C = 0)	9	V
I_C	Collector current	8	A
I_{CM}	Collector peak current (t_P < 5ms)	15	A
I_B	Base current	4	A
P_{TOT}	Total dissipation at T_c = 25°C	50	W
V_{ins}	Insulation withstand voltage (RMS) from all three leads to external heatsink	2500	V
T_{stg}	Storage temperature	-65 to 150	°C
T_J	Max. operating junction temperature	150	

Table 3. Thermal data

Symbol	Parameter	Value	Unit
$R_{thj\text{-}case}$	Thermal resistance junction-case max	2.5	°C/W

2 Electrical characteristics

(T_{case} = 25°C unless otherwise specified)

Table 4. Electrical characteristics

Symbol	Parameter	Test conditions	Min.	Typ.	Max.	Unit
I_{CES}	Collector cut-off current (V_{BE} =0)	V_{CE} = 1500V V_{CE} = 1500V; T_C= 125°C			0.2 2	mA mA
I_{EBO}	Emitter cut-off current (I_C =0)	V_{EB} = 9V			1	mA
$V_{CEO(sus)}$ (1)	Collector-emitter sustaining voltage (I_C =0)	I_C = 100mA	700			V
$V_{CE(sat)}$ (1)	Collector-emitter saturation voltage	I_C = 4.5A I_B = 1.6A			1	V
$V_{BE(sat)}$ (1)	Base-emitter saturation voltage	I_C = 4.5A I_B = 2A			1.1	V
h_{FE} (1)	DC current gain	I_C = 0.1A V_{CE} = 5V I_C = 4.5A V_{CE} = 5V	10 5		30	
t_s t_f	Inductive load Storage time Fall time	I_C = 4.5A $I_{B(on)}$ = 0.5A $V_{BE(off)}$ = -2.7V f_h = 16KHz $L_{BB(off)}$ = 4.5µH		2.5 0.2		µs µs

1. Pulsed: Pulse duration = 300 ms, duty cycle 1.5 %

2.1 Electrical characteristics (curves)

Figure 2. Safe operating area

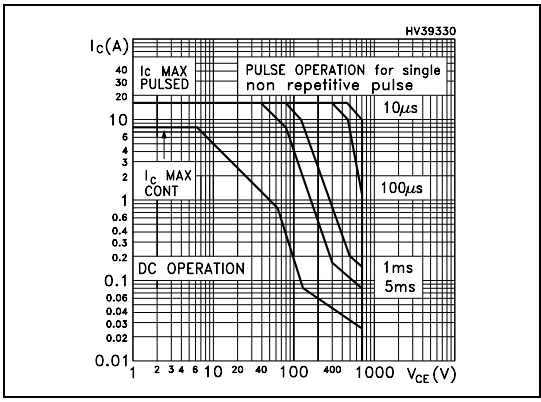

Figure 3. Derating curve

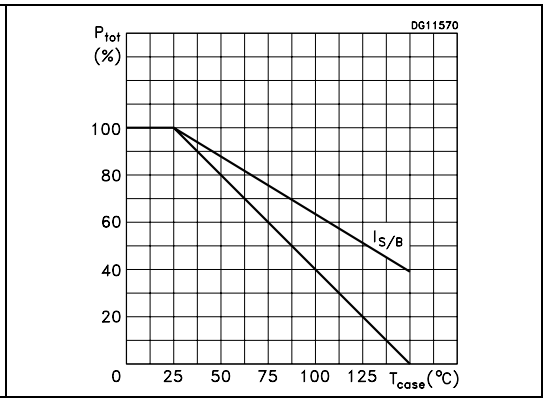

Figure 4. DC current gain

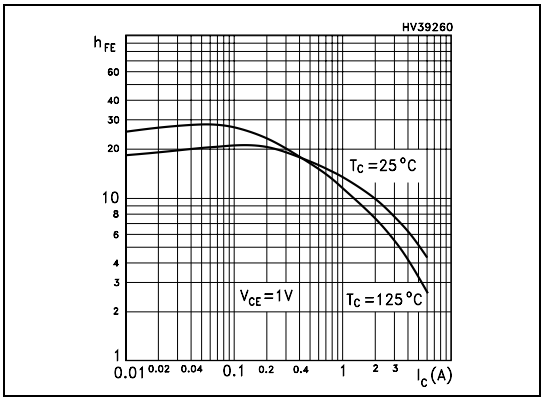

Figure 5. DC current gain

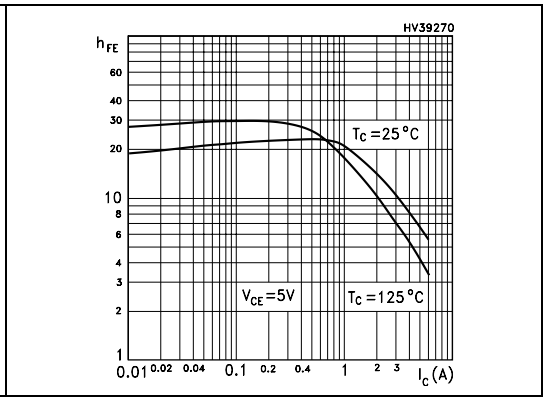

Figure 6. Collector-emitter saturation voltage

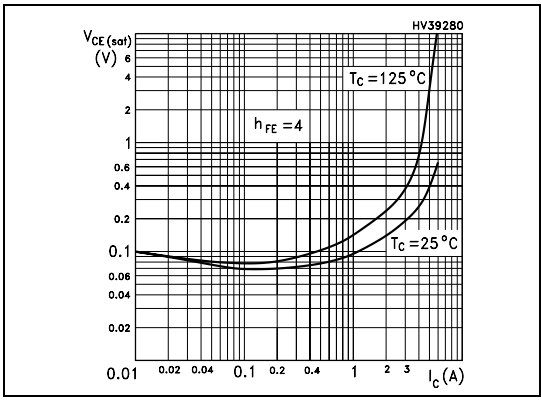

Figure 7. Base-emitter saturation voltage

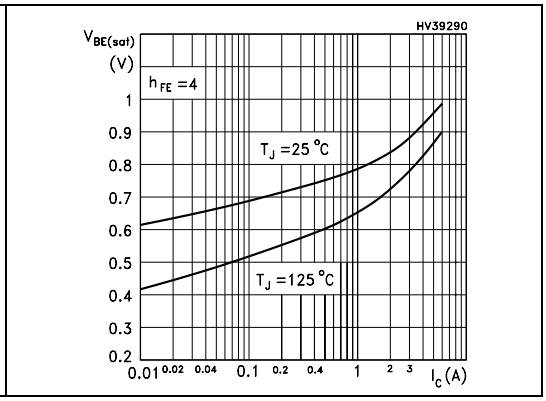

Figure 8. Output characteristics

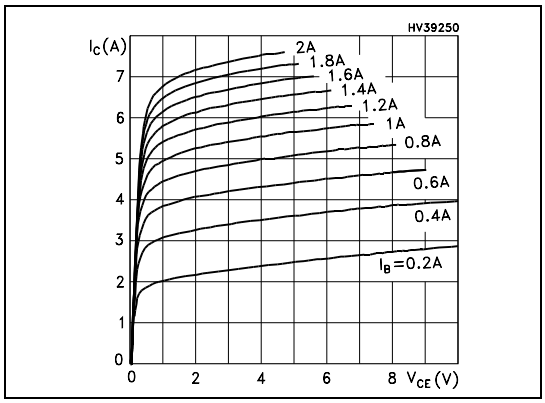

2.2 Test circuits

Figure 9. Power losses and inductive load switching

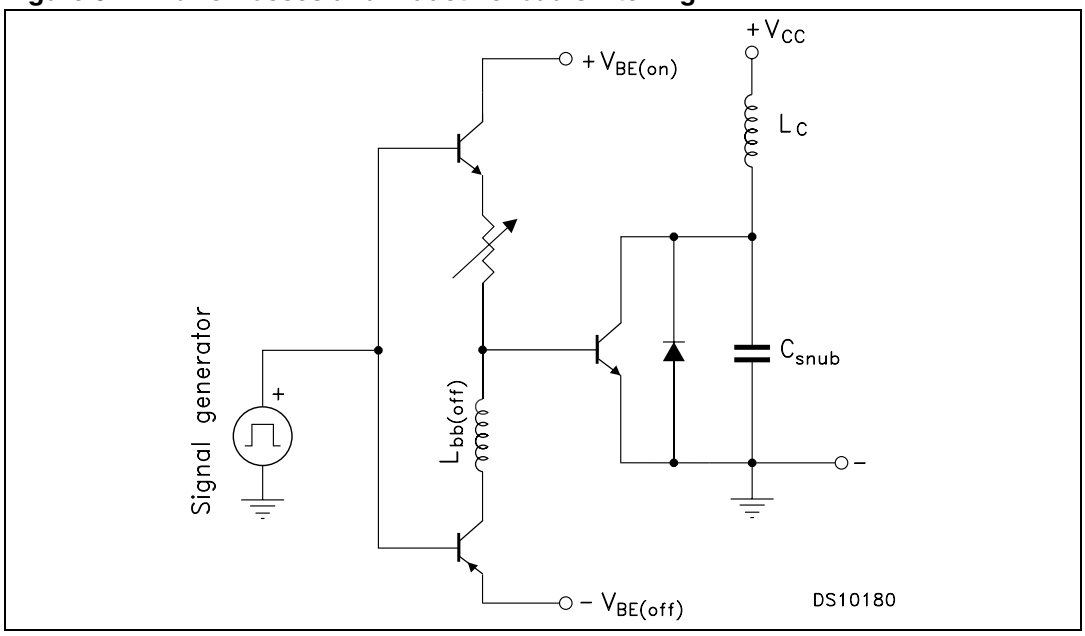

Figure 10. Reverse biased safe operating area

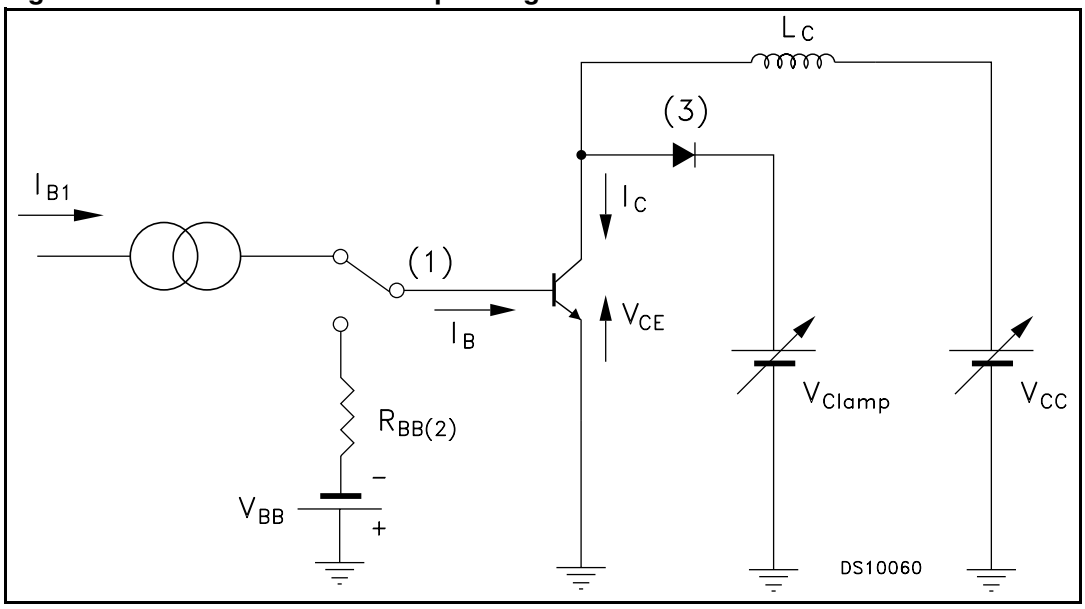

3 Package mechanical data

In order to meet environmental requirements, ST offers these devices in ECOPACK® packages. These packages have a Lead-free second level interconnect. The category of second level interconnect is marked on the package and on the inner box label, in compliance with JEDEC Standard JESD97. The maximum ratings related to soldering conditions are also marked on the inner box label. ECOPACK is an ST trademark. ECOPACK specifications are available at: www.st.com

ISOWATT218FX mechanical data			
Dim.	mm.		
	Min.	Typ	Max.
A	5.30		5.70
C	2.80		3.20
D	3.10		3.50
D1	1.80		2.20
E	0.80		1.10
F	0.65		0.95
F2	1.80		2.20
G	10.30		11.50
G1		5.45	
H	15.30		15.70
L	9		10.20
L2	22.80		23.20
L3	26.30		26.70
L4	43.20		44.40
L5	4.30		4.70
L6	24.30		24.70
L7	14.60		15
N	1.80		2.20
R	3.80		4.20
Dia	3.40		3.80